Adjustable Stainless Steel Door Stops

Mounted overhead and opened outward.
Door opening angle can be adjusted at any degree within 100 degrees.

SH-AS300A type 312
Surface Mounted Overhead door stops/holders

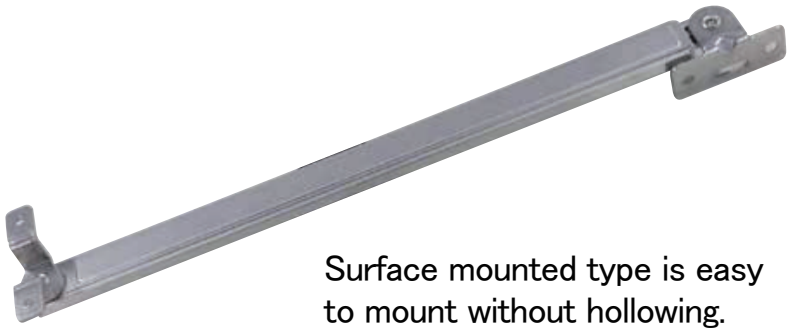

Surface mounted type is easy to mount without hollowing.

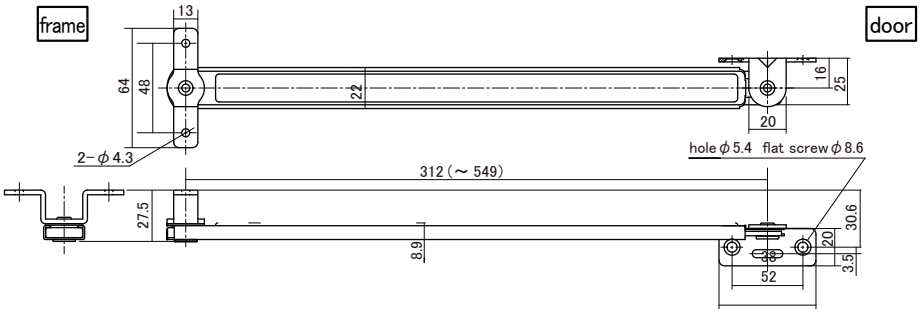

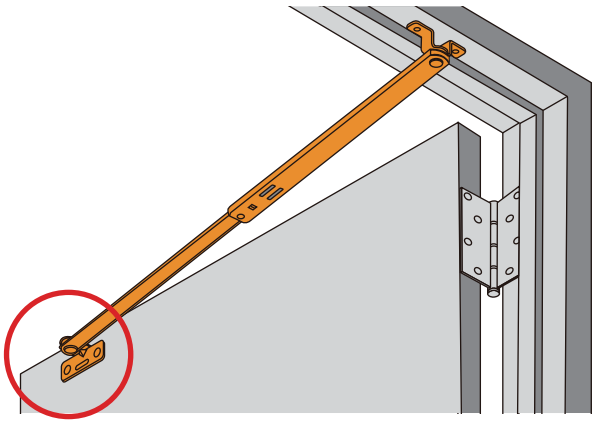

No hollowing required.

SH-AS300B type 312
Concealed Overhead door stops/holders

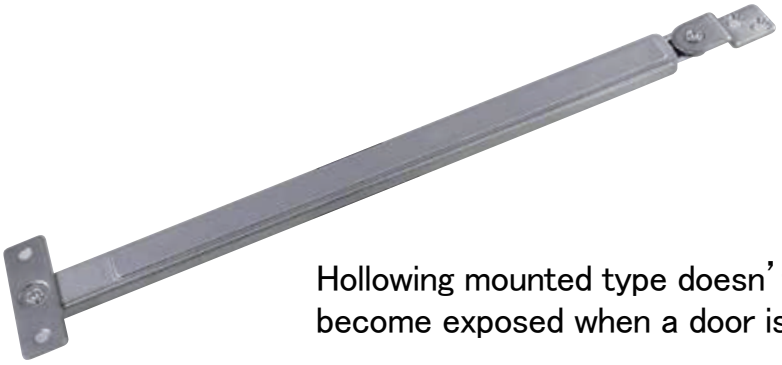

Hollowing mounted type doesn't become exposed when a door is closing.

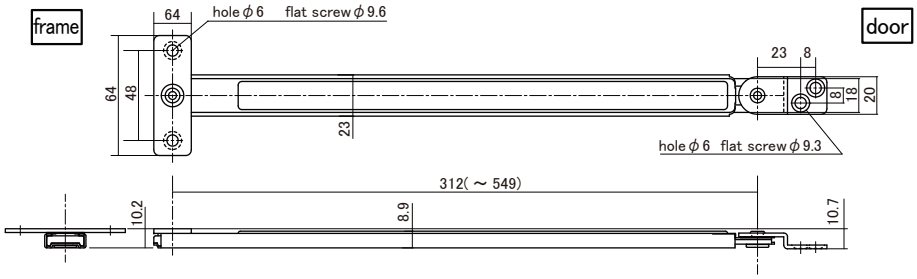

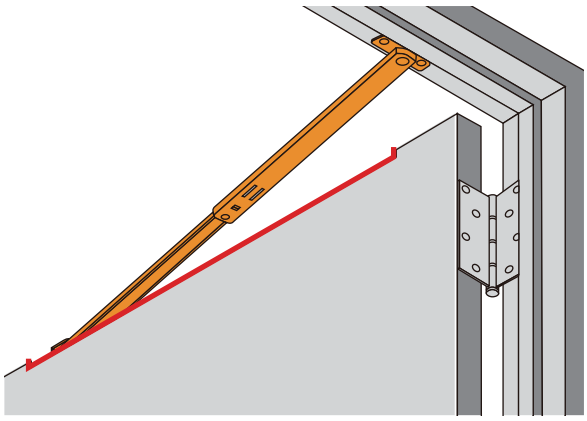

Fitting goes out of the sight, it looks simple and beautiful.

- This fitting will be used to keep a door open at any angle you like, also used when floor stops are unable to fix on floors or base board.
- For lightweight doors of standard houses.
- Moves quietly and smoothly.

【Material】304 Stainless steel
【Attached】Stainless steel mounting screws
●Surface mounted：3 pan head tapping screws 4×25
2 flat head tapping screws 4×25
●Consealed：4 flat head tapping screws 4×25

Product code	Product name	Quantity		Price(JPY)
		case	box	
99072000	SH-AS300A Surface Mounted Overhead door stops	60	6	3,800
99072001	SH-AS300B Concealed Overhead door stops			

Shimizu Co.,Ltd. website：www.shimizu-net.co.jp email：info@shimizu-net.co.jp